REV	DESCRIPTION	CHKD	APPD	DATE
A	INITIAL RELEASE	SH	FG	5/1/97
B	REVISED EDITION	SH	FG	10/7/98
C	REVISED EDITION	SH	FG	1/4/98
D	REVISED EDITION	SH	FG	6/21/00
D1	REVISED TITLE BLOCK	SRO		12/1/03

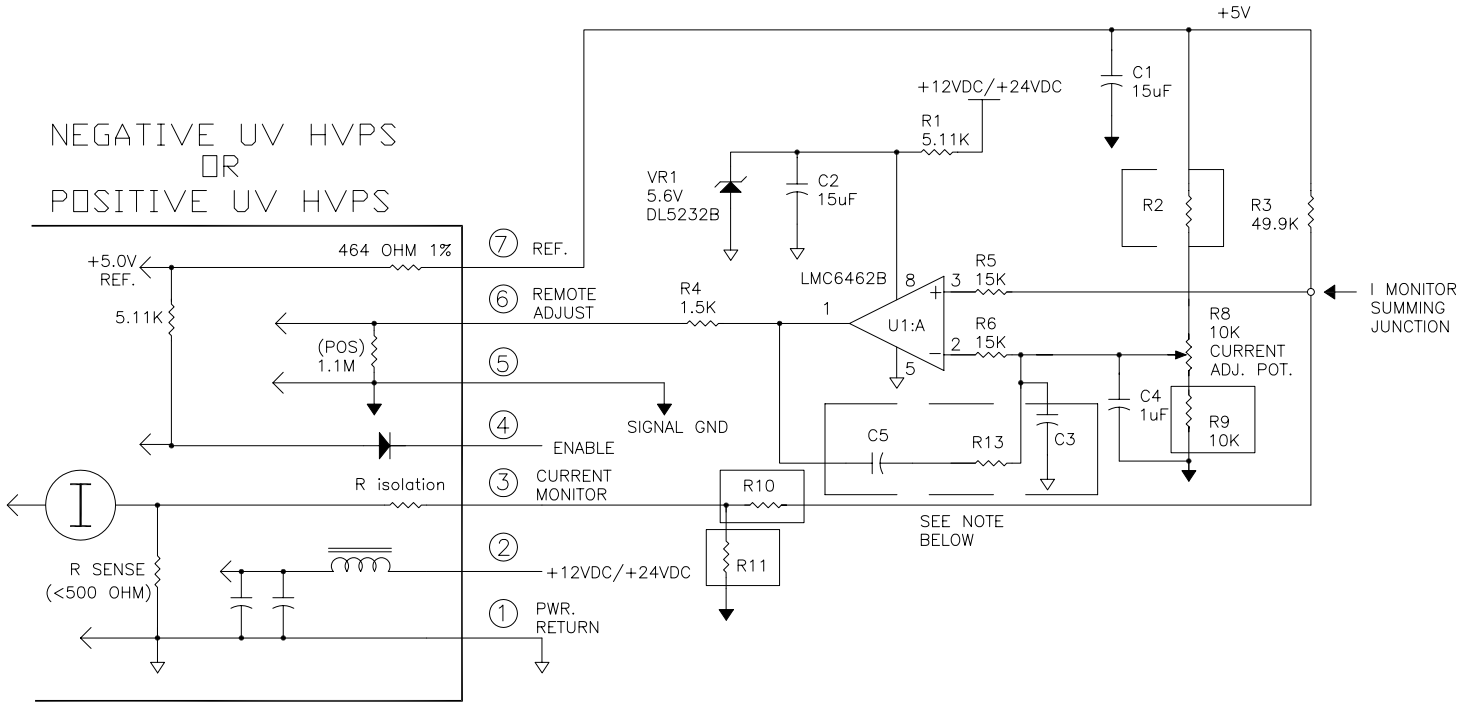

MODEL	HVPS "R" ISOLATION	NEGATIVE HVPS I MONITOR	POSITIVE HVPS I MONITOR	R10	R9	R2	R11	R8 VOLTAGE RANGE	APPROXIMATION OF SUMMING JUNCTION VOLTAGE N	APPROXIMATION OF SUMMING JUNCTION VOLTAGE P
1/8 A TO 6 A	15K	0 TO +100mV	0 TO -100mV	0 Ohm	6.8K	22K	--	+0.88 TO +2.16	+1.15 TO +1.23	+1.15 TO +1.07
10 A TO 35 A	15K	0 TO +8V	0 TO -8V	36K	330	330	15K	+0.15 TO +4.85	+2.32 TO +4.47	+2.32 TO +0.20
HIGH C	5.11K	0 TO +1.6V	0 TO -1.6V	22K	1.5K	6.8K	--	+0.41 TO +3.14	+1.76 TO +2.79	+1.76 TO +0.71
LOW C	0 Ohms	0 TO +100mV	0 TO -100mV	15K	6.8K	22K	--	+0.88 TO +2.16	+1.15 TO +1.23	+1.15 TO +1.07

NOTE:
THIS FULL RANGE
IS NOT IN USE BY
ALL MODELS.

NOTE: TYPICAL VALUES FOR AC COMPENSATION NETWORK
ARE: C5(.01 uF), C3(.001uF), R13(100K)

UltraVolt, Inc.
1800 Ocean Ave. Frnt
Ronkonkoma, NY 11779
1-631-471-4444

Title
BASIC EXTERNAL
CONSTANT CURRENT REGULATOR

Size	Number	Rev.
A	UV- HVPS-CONN-10	D1

Date 6/14/00	Drawn By M.Z.
Filename UV-HVPS-CONN-10_revD1.dwg	Sheet 1 Of 1