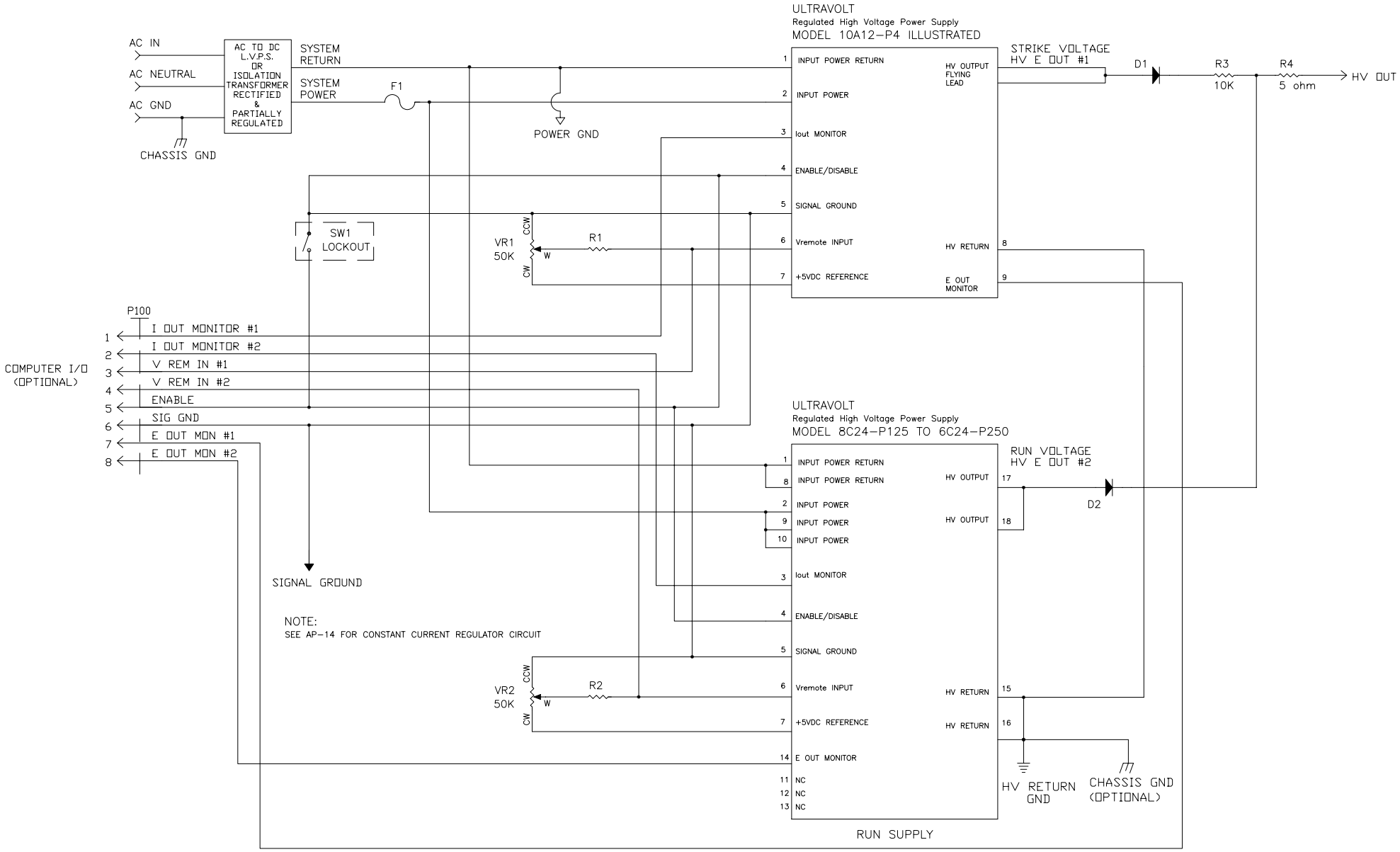

UltraVolt, Inc. 1800 Ocean Ave. Frnt Ronkonkoma, NY 11779 1-631-471-4444	Title LASER STRIKE AND RUN SUPPLY	
	Size: A	Number: UV- HVPS-CONN-12	Rev. C1
	Date 6/8/00	Drawn By M.Z.
	Filename UV-HVPS-CONN-12_revC1.dwg	Sheet 1 Of 1