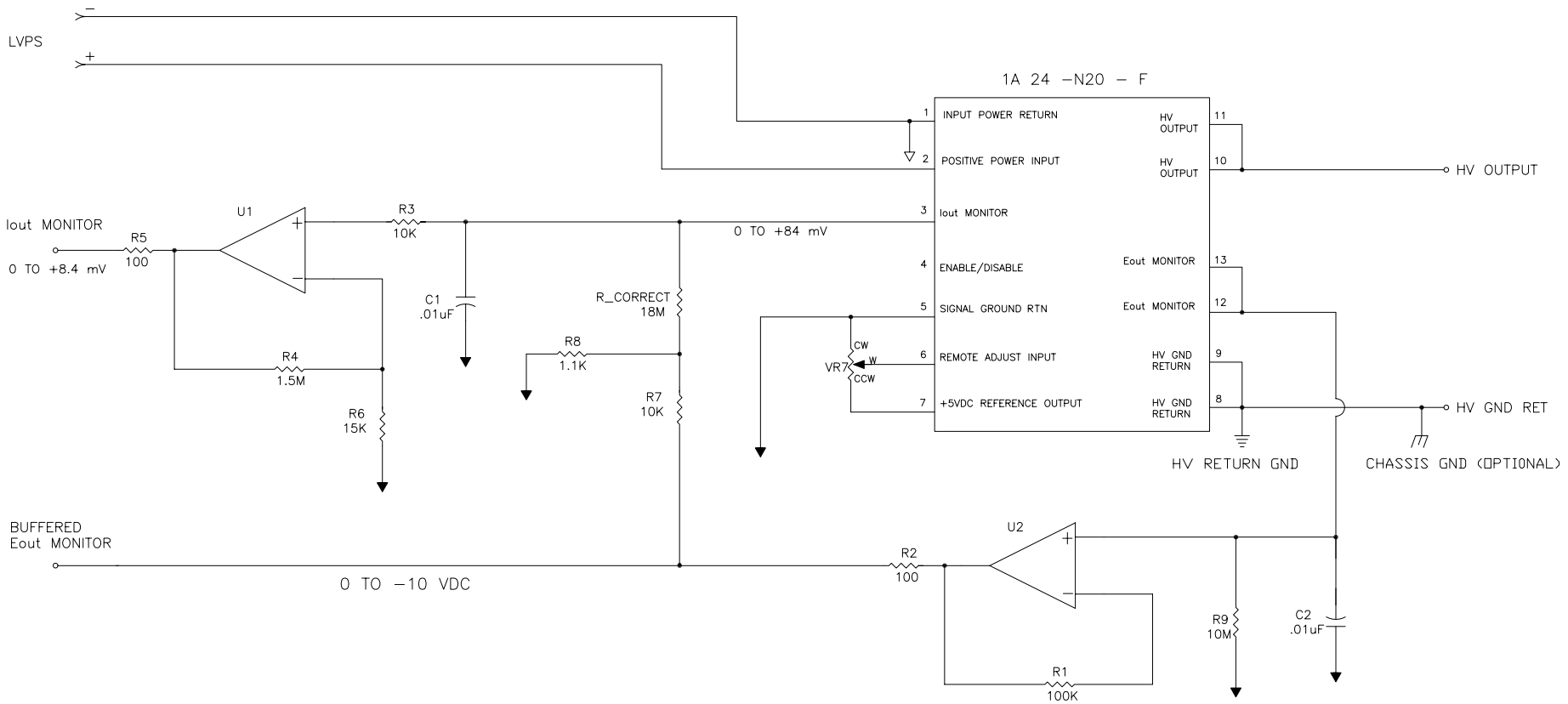

(1 f/b +1 t/p) * R sense = E error

$$\frac{\text{E error}}{\text{R isolation}} = \text{I correction}$$

$$\frac{\text{E out Monitor}}{\text{I correction}} = \text{R correction}$$

$$\frac{1\text{KV}}{10\text{M} + 46.6\text{K}} = 1\ \text{f/b} = 0.0000995 = 99.5\text{uA}$$

$$\frac{1\text{KV}}{10\text{M} + 102\text{K}} = 1\ \text{t/p} = 0.0000989 = 98.9\text{uA}$$

R sense = 4.2 ohms R isolation = 15K

(99.5uA + 98.9uA) * 4.2 ohms = E error = 0.83mV

$$\frac{0.83\text{mV}}{15\text{K}} = 1\ \text{correction} = 0.055\text{uA} = 55\text{nA}$$

$$\frac{10\text{V}}{0.055\text{uA}} = \text{R correction} = 181\text{M}$$

UltraVolt, Inc.
1800 Ocean Ave. Frnt
Ronkonkoma, NY 11779
1−631−471−4444

Title: TYPICAL HVPS CONNECTIONS − Eout MONITOR		
Size: A	Number: UV− HVPS−CONN−15	Rev. C1
Date 6/5/00	Drawn By M.Z.	
Filename UV-HVPS-CONN-15P3_revC1.dwg	Sheet 3 Of 3	