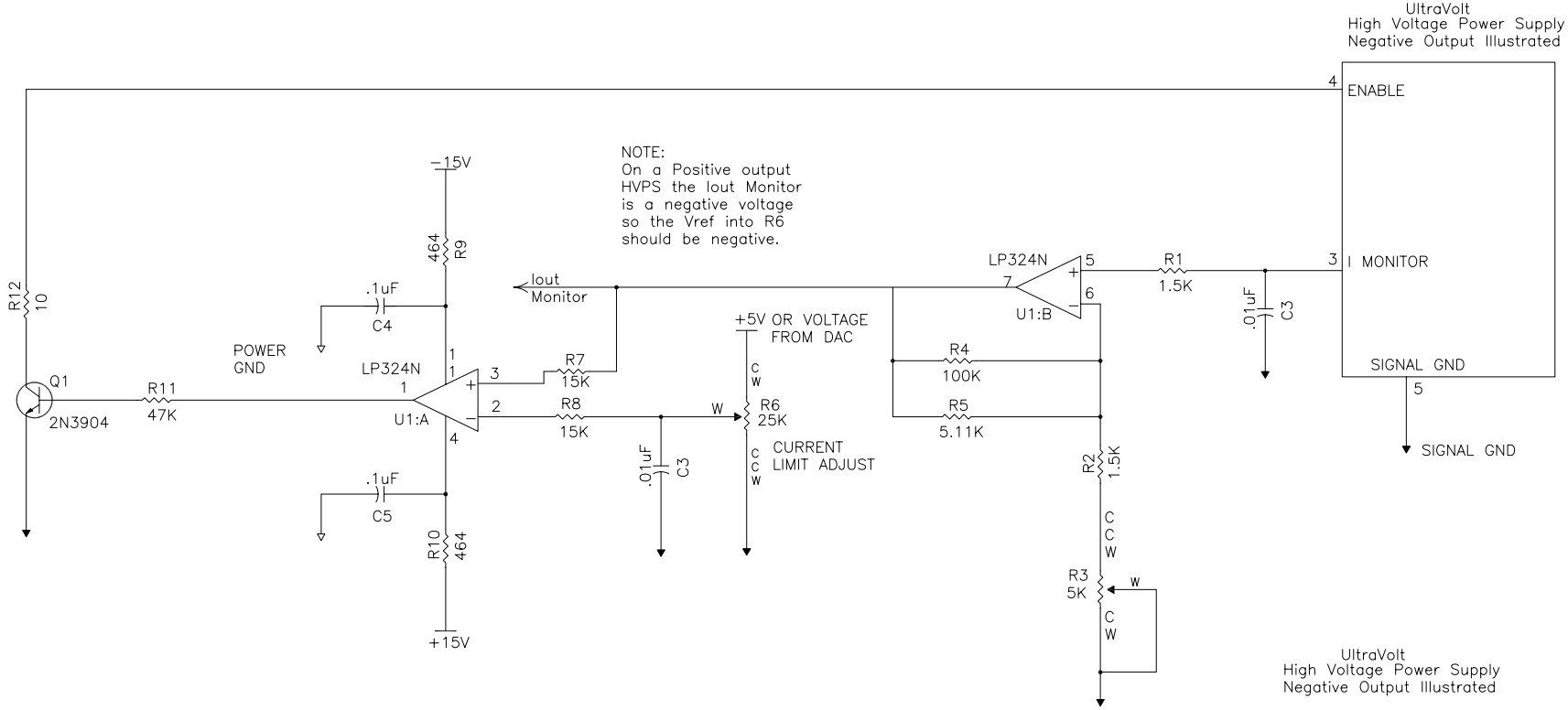

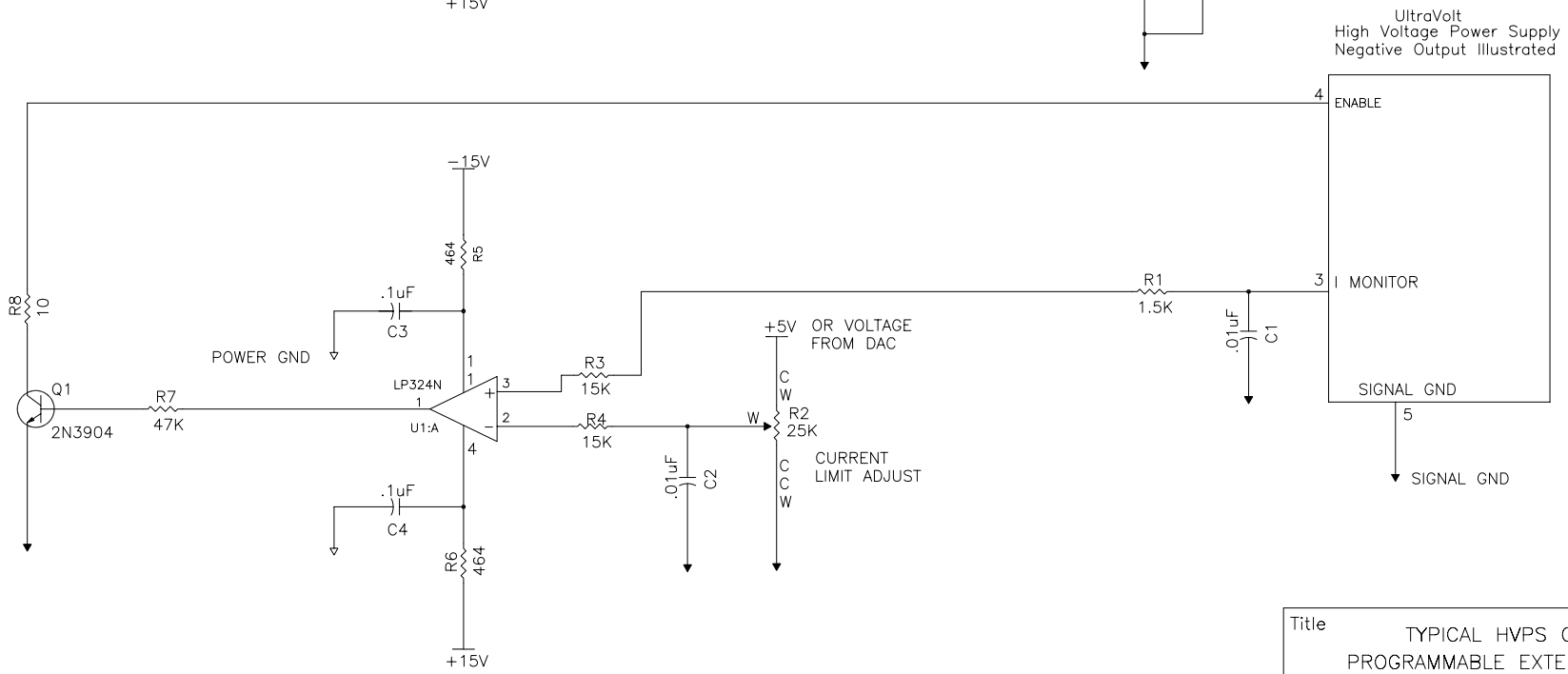

NOTES: REFER TO UV APLICATION NOTE 13 FOR Iout MONITOR SCALE FACTORS
UNUSED OP AMP INPUT SHOULD BE PULLED LOW

UltraVolt, Inc.
1800 Ocean Ave. Frnt
Ronkonkoma, NY 11779
1-631-471-4444

Title	TYPICAL HVPS CONNECTIONS PROGRAMMABLE EXTERNAL CURRENT LIMIT	
Size A	Number UV-HVPS-CONN-6	Rev. E1
Date 6/21/00	Drawn By J.T.	
Filename UV-HVPS-CONN-6_revE1.dwg	Sheet 1 Of 1	